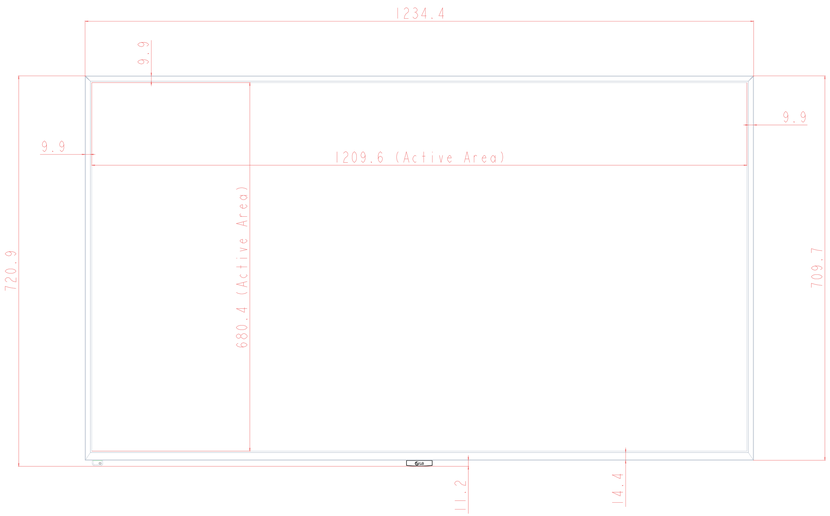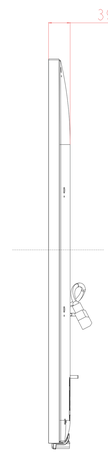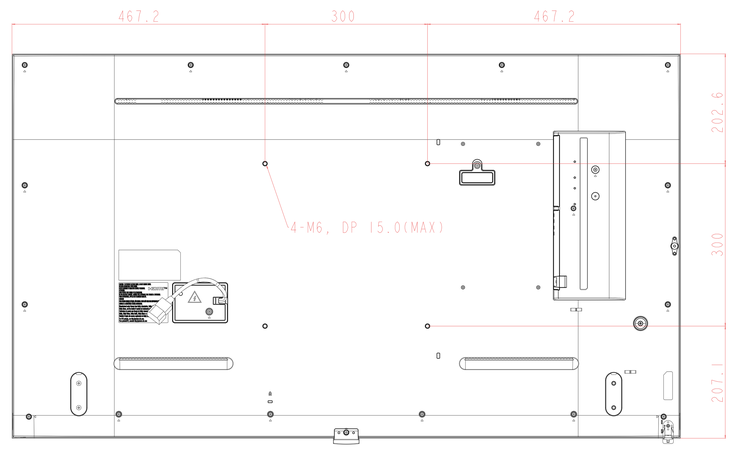55UMH5F Set Dimension	
Model	55UH7F, 55UH5F, 55UM3F, 55UM3DF
Scale	1/2
Unit	mm